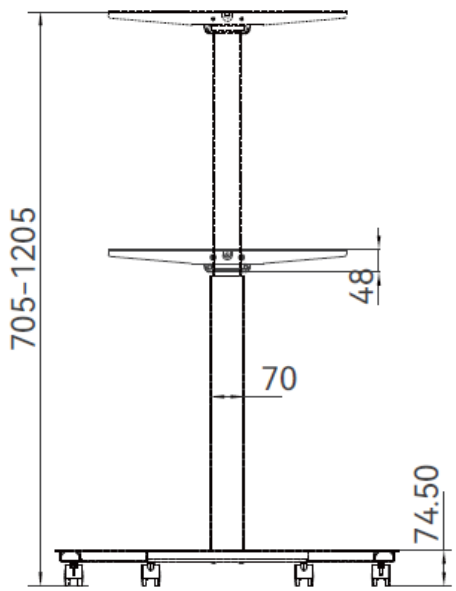


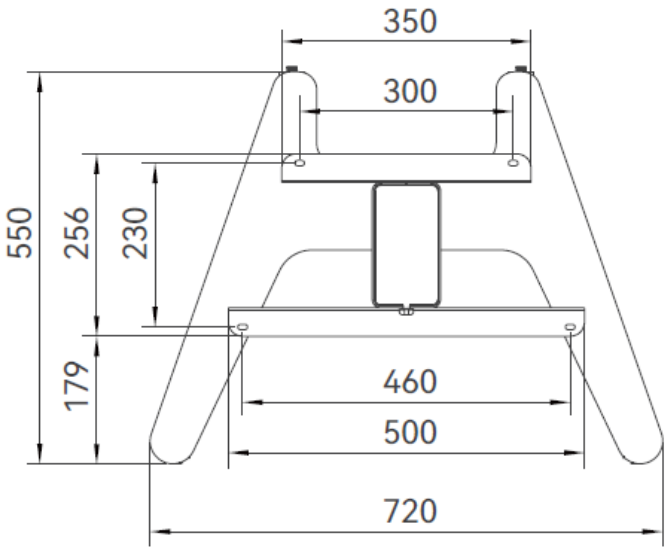


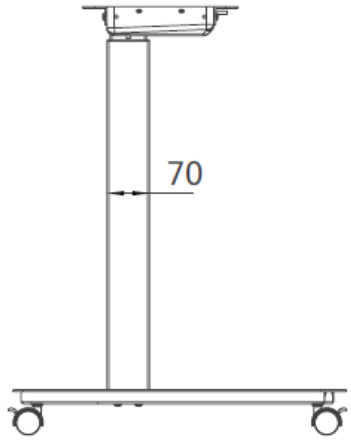

Load: 1'000 N
Speed: 40 mm/s

| | |
|---|---|
| Frame FBA-650-500-W-F1-EU-U1 | FLEX BENCH SMART WORKSPACE ERGONOMICS |
| Color White | 21.09.2025 / Index 01 |