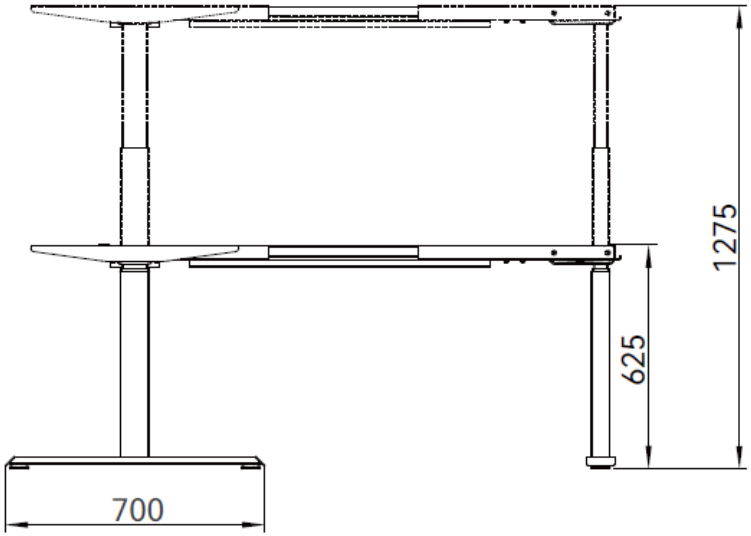

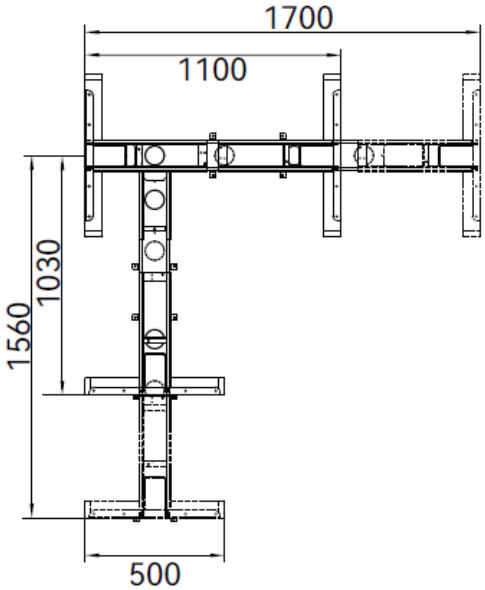

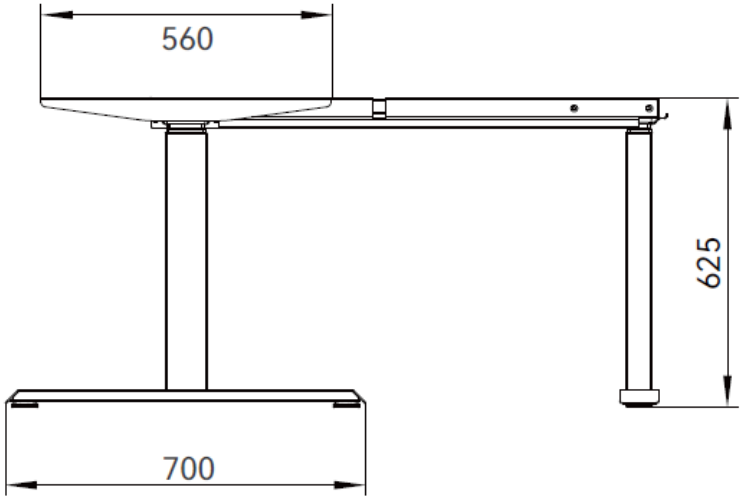

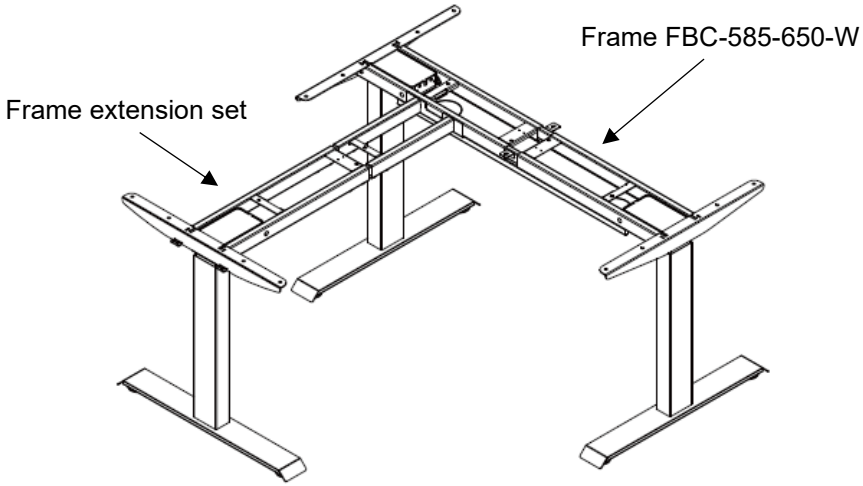

Load: 1'200 N
Speed: 40 mm/s

Frame extension set FBC-F3-W-EXT-90° (for Frame FBC-585-650-W)	FLEX BENCH SMART WORKSPACE ERGONOMICS
Color White	21.09.2025 / Index 01